THIS DRAWING IS THE PROPERTY OF ANALOG DEVICES INC. IT IS NOT TO BE REPRODUCED OR COPIED, IN WHOLE OR IN PART, OR USED IN FURNISHING INFORMATION TO OTHERS, OR FOR ANY OTHER PURPOSE DETRIMENTAL TO THE INTERESTS OF ANALOG DEVICES.
THE EQUIPMENT SHOWN HEREON MAY BE PROTECTED BY PATENTS OWNED OR CONTROLLED BY ANALOG DEVICES.

RELAY CONTROL CHART

CONTROL	CODE	DEVICE	FUNCTION	CONNECTOR

REVISIONS			
REV	DESCRIPTION	DATE	APPROVED

AMPLIFIER

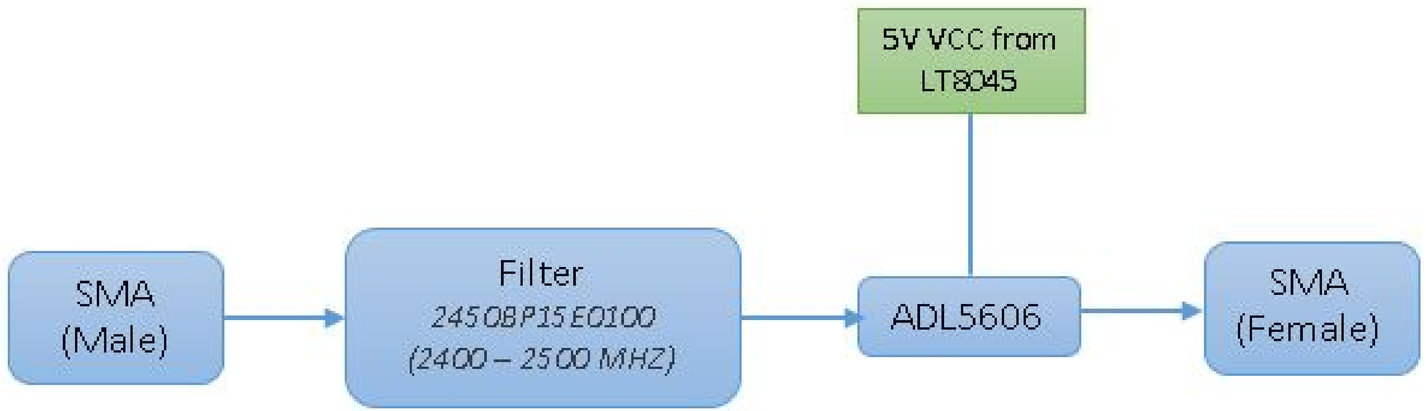

USB POWER

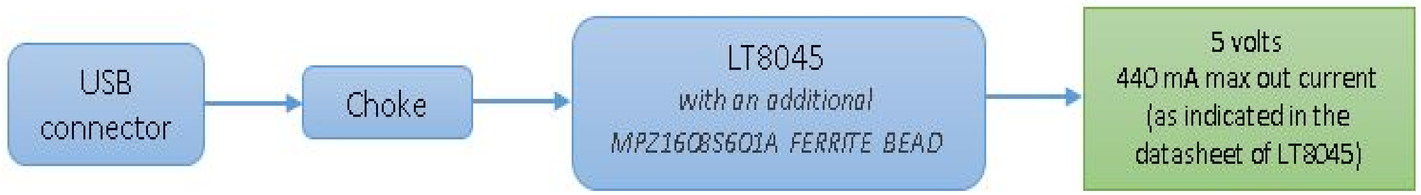

ANALOG DEVICES

THIS DRAWING IS THE PROPERTY OF ANALOG DEVICES INC.
IT IS NOT TO BE REPRODUCED OR COPIED, IN WHOLE OR
IN PART, OR USED IN FURNISHING INFORMATION TO OTHERS,
OR FOR ANY OTHER PURPOSE DETRIMENTAL TO THE INTERESTS
OF ANALOG DEVICES.
THE EQUIPMENT SHOWN HEREON MAY BE PROTECTED BY PATENTS
OWNED OR CONTROLLED BY OWNED ANALOG DEVICES.

SCHEMATIC

HW TYPE : Customer Evaluation Z
Product(s): ADL5324
: JOHANSON TECHNOLOGY 2450BP15E0100

DESIGN VIEW	DRAWING NO.	REV
<DESIGN_VIEW>	02_046520	B

PTD ENGINEER	SIZE	SCALE	SHEET 2 OF 3
R.GETZ	D	1:1	

REVISIONS			
REV	DESCRIPTION	DATE	APPROVED

AMPLIFIER

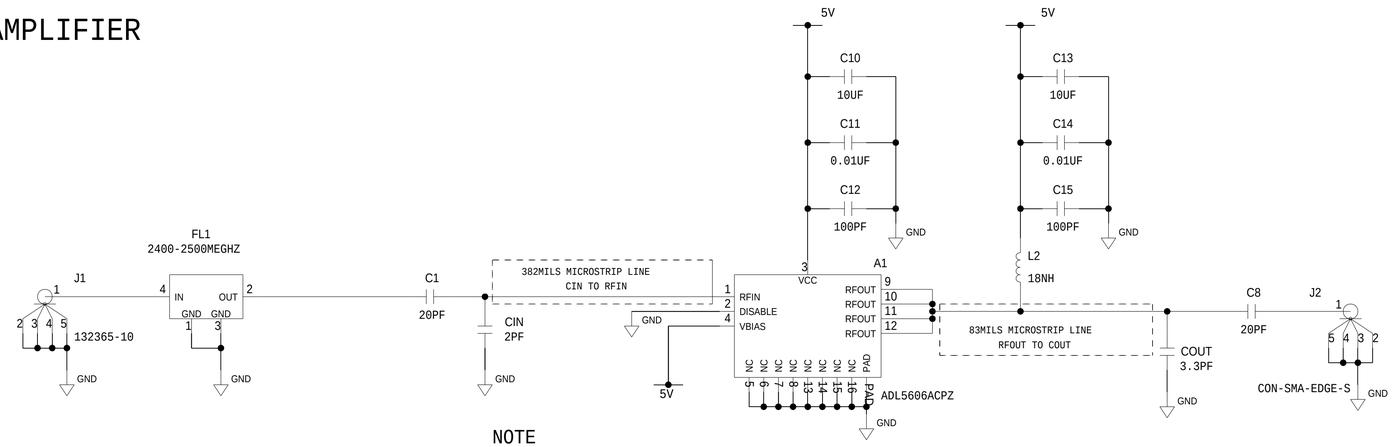

NOTE

PLACEMENT OF CIN AND COUT IS CRITICAL FOR IMPEDANCE MATCHING AS STATED IN DATASHEET

4 LAYERS, POWER ON ONE SIDE, RF ON THE OTHER, AS SMALL AS PRACTICAL

USB POWER

NOTE

PLACE THE RFB AND RT RESISTORS AS CLOSE AS POSSIBLE TO THEIR RESPECTIVE PINS.

R2/R3/C16/L3 NEED TO BE AS CLOSE TO THE CHIP AS POSSIBLE

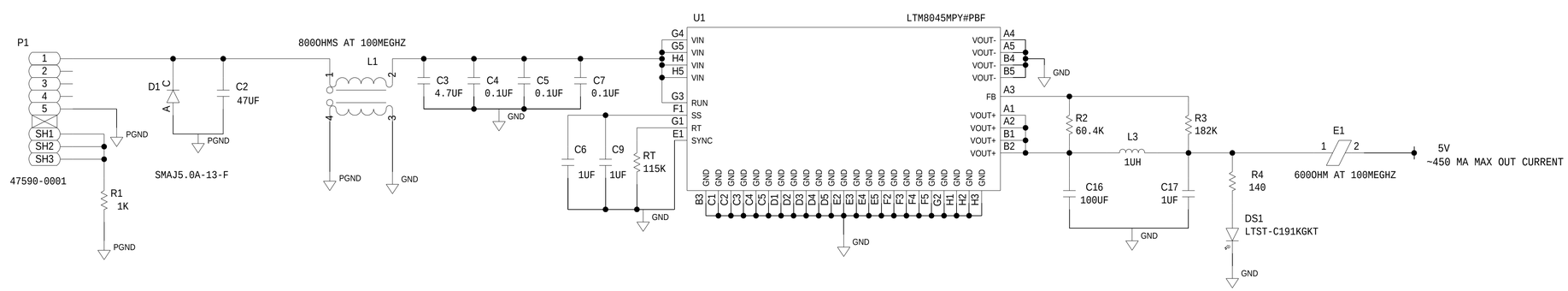

ANALOG DEVICES

THIS DRAWING IS THE PROPERTY OF ANALOG DEVICES INC.
IT IS NOT TO BE REPRODUCED OR COPIED, IN WHOLE OR IN PART, OR USED IN FURNISHING INFORMATION TO OTHERS, OR FOR ANY OTHER PURPOSE DETRIMENTAL TO THE INTERESTS OF ANALOG DEVICES.
THE EQUIPMENT SHOWN HEREON MAY BE PROTECTED BY PATENTS OWNED OR CONTROLLED BY OWNED ANALOG DEVICES.

SCHEMATIC

HW TYPE : Customer Evaluation Z
Product(s): ADL5324
: JOHANSON TECHNOLOGY 2450BP15E0100

DESIGN VIEW	DRAWING NO.	REV
<DESIGN_VIEW>	02_046520	B

PTD ENGINEER	SIZE	SCALE	SHEET
R.GETZ	D	1:1	3 OF 3